EC Centrifugal Fans

Backward Curved, Φ250

EC后向离心风机

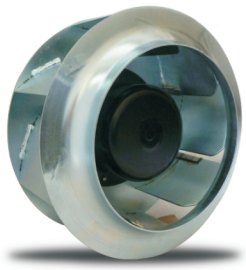

Impeller: Aluminum Sheet
Motor: EC brushless external rotor motor
Insulation: Class B
Approvals: CE; UL is in process
Operating Temperature: -20~+60℃
Technical Features: Control input 0-10VDC/PWM, tach output,Locked rotor protection,reverse polarity, Current limited,soft start

叶轮材质：铝合金
电机类型：EC无刷外转子电机
绝缘等级：Class B
产品符合的认证：CE; UL 正在申请中
工作温度：-20℃～+60℃
技术特性：调速输入0-10VDC/PWM, 调速信号输出，堵转，极性、限流保护，软启动。

技术参数 Specifications

Listed Model 产品型号	Rated Voltage 额定电压	Operating Voltage 工作电压	Rated Current 额定电流	Rated Power 额定功率	Rated Speed 额定转速	Air Flow 风 量		Air Pressure 风 压		Noise Level 噪 音	Net Weight 重 量
Part NO.	**VAC**	**VAC**	**A**	**W**	**RPM**	**CFM**	**m^3/h**	**mmH_2O**	**inH_2O**	**dBA**	**Kg**
PI1E250110UB2M	115	92~138	6	400.0	3,200	1116.6	1896.6	79.96	3.15	75	6
PI2E250110UB2M	230	184~280	3	400.0	3,200	1116.6	1896.6	79.96	3.15	75	6

外形 Outline

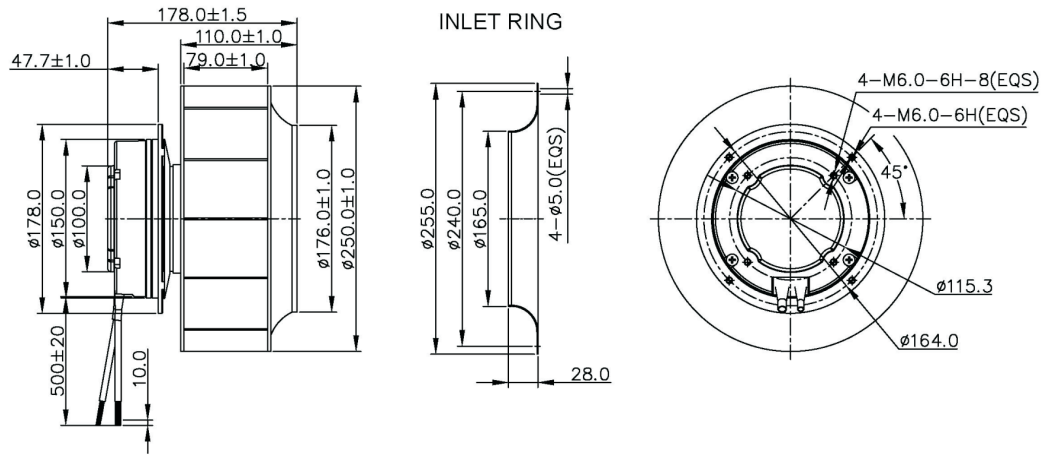
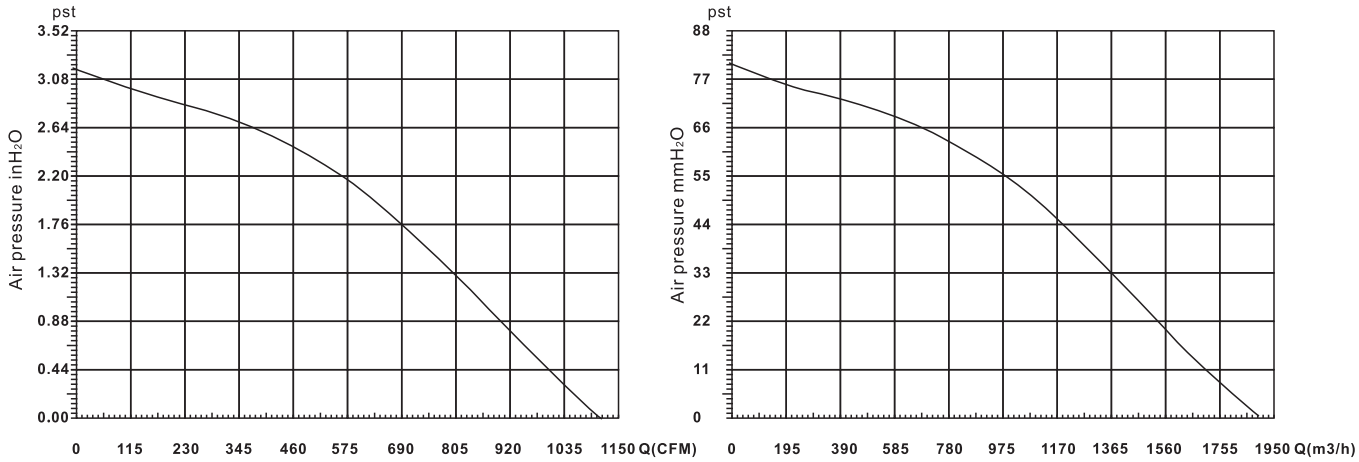
曲线 Curves