DEGSON ELECTRONICS CO., LTD.

Product Specification

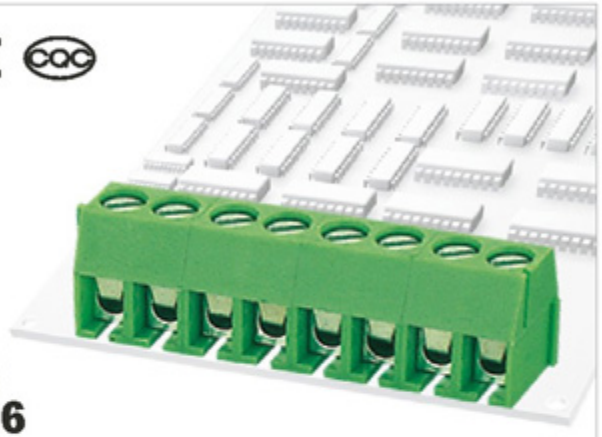

DG350-3.5
DG350-3.96

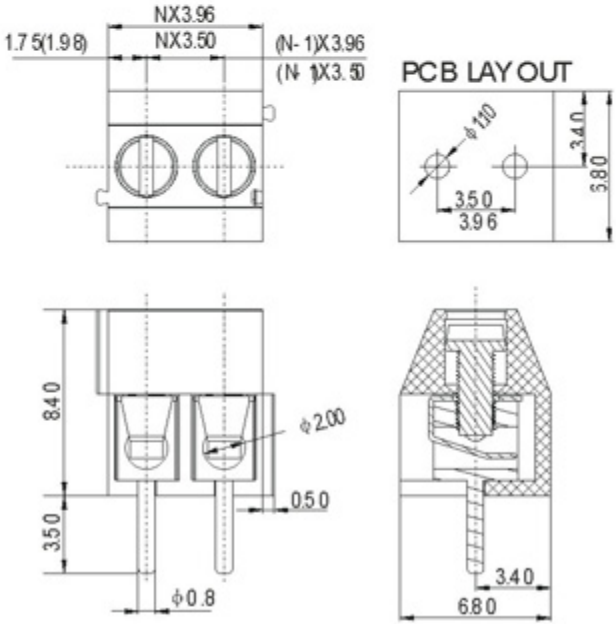

Approval		
Electrical		
Standard	UL	IEC
Rated voltage	300V	130V
Rated current	7A	10A
Wire range	24-18AWG	1.0mm²
With standing voltange	AC1250V/1Min	
Mechanical		
Torque	0.2Nm(1.7Lb-In.)	
Ambient temperature	-40°C~+105°C	
Strip length	5-6mm	
Dimensions		
Pitch	3.5mm(.138″)3.96mm(.156″)	
Poles	2P,3P-24P	
Material		
Housing	PA66, UL94V-0	
Screws	M2,steel,Cr³⁺Zn plated	
Pin header	Brass,Tin plated	
Wire guard	Phosphor bronze	

HOW TO ORDER

[ ] – [ ][ ] P – [ ][ ] – [X][X][X] Customer Request

Series Number

Number of Pole

1	Single pitch
2	Double pitch

Color

1	Grey	4	Green	7	Trans-parent
2	Blue	5	Orange	8	Yellow
3	Black	6	Red	9	White

MM (INCH)

THIRD ANGLE PROJECTION

DEGSON ELECTRONICS CO., LTD.

NAME **DG350-3.5**
DG350-3.96