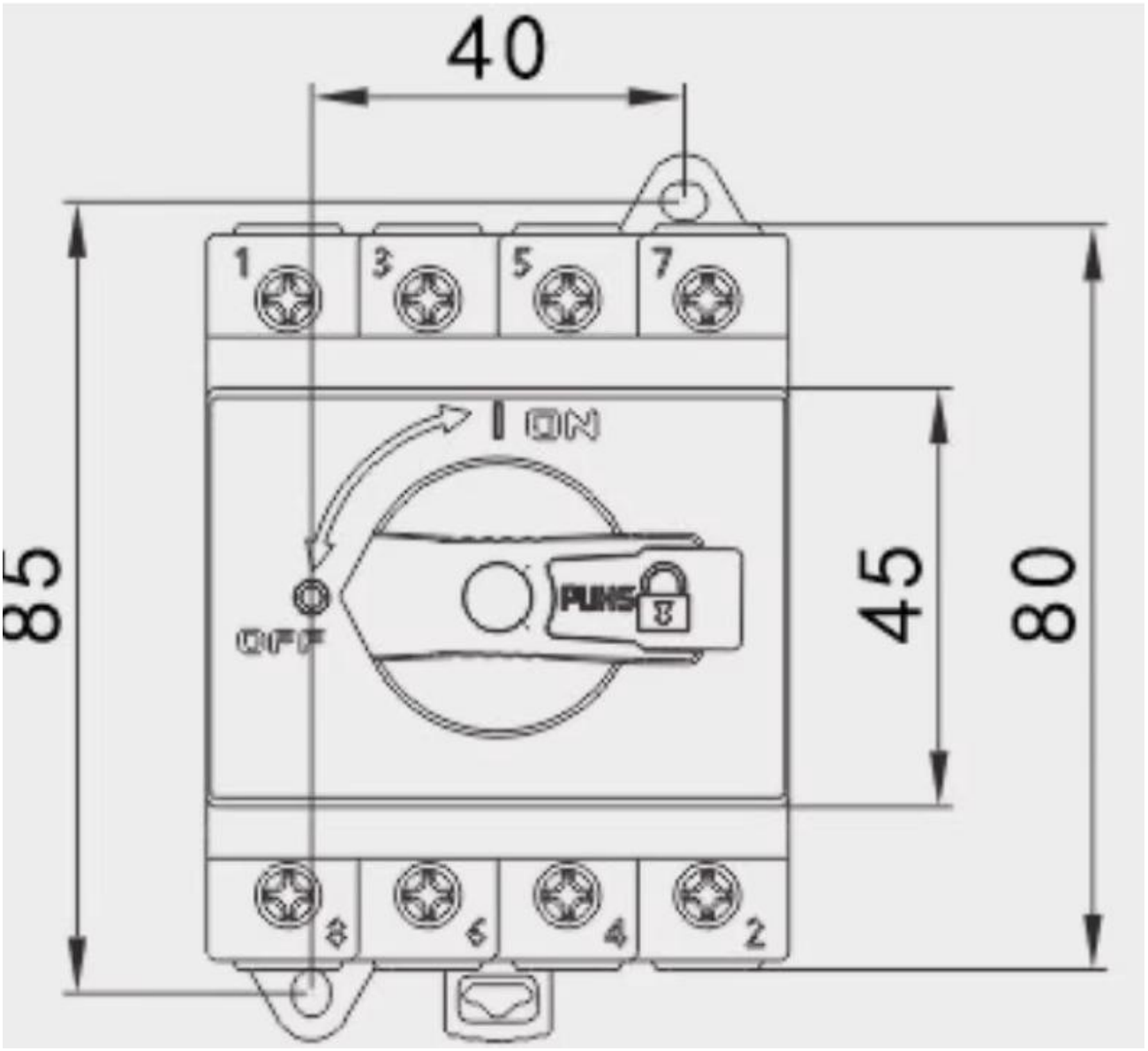
40
85
45
80
1
3
5
7
I ON
OFF
PUNS
8
6
4
2

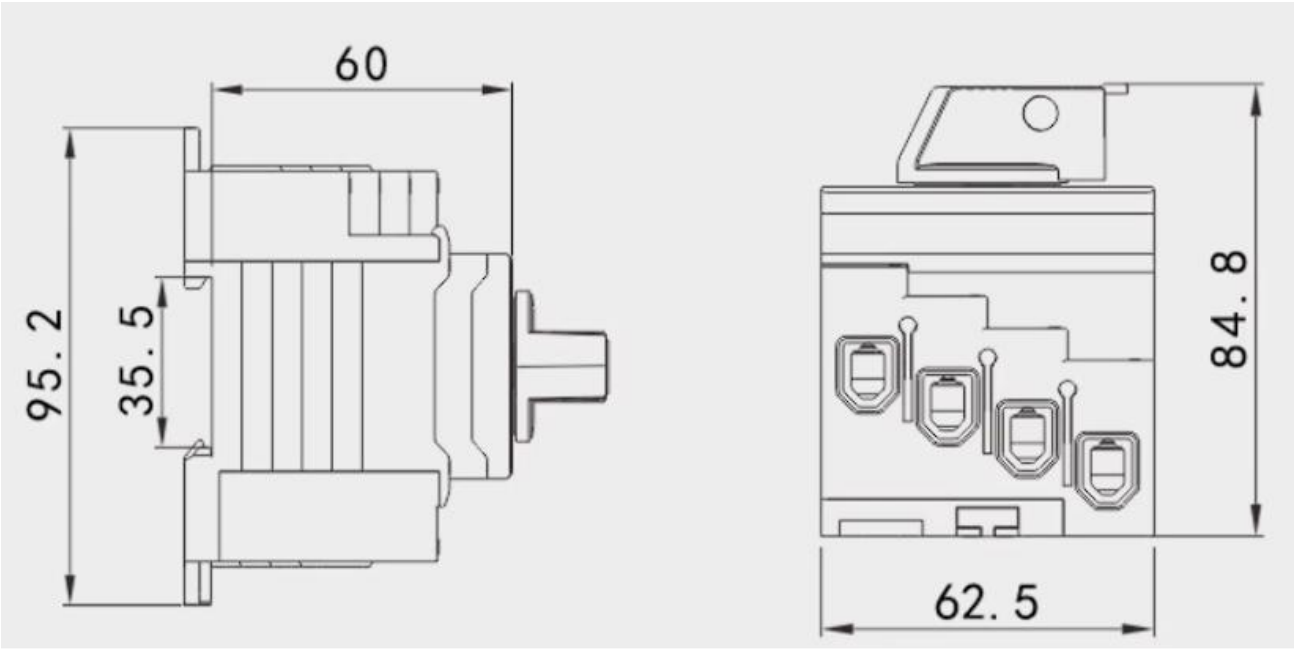
60
95.2
35.5
84.8
62.5

Specification

Electrical characteristic	
Model number	GDSC100R-DB32R/GDSC100R-EL32R
Feature	Isolation and control
Standard	IEC60947-3,AS60947.3
Utilization category	DC-PV1/DC-PV2
Pole	4P
Rated frequency	DC
Rated operating voltage(Ue)	300V/600V/800V/1000V/1200V
Rated insulation voltage(Ui)	1200V
Rated short-time withstand current (Icw)	1kA/1s(4,4S,4B),1.7kA/1s(2H)
Rated conditional short-circuit current (Icn)	3kA
Rated impulse withstand voltage(Uimp)	8.0kV
Overvoltage category	II
Polarity	Nopolarity,“+”and“-”polarities could beinterchanged
Service Life/Cycle Operations	
Mechanical	15000
Electrical	300
Installation environment	
Ingress protection	IP20
Storage temperature	-40℃~+85℃