GRT8-K
Digital Setting Time Relay

GEYA® INDUSTRIAL CONTROL

GRT8 —K □/□
- Rated control supply voltage — A230:AC230V ; W240:AC/DC12V-240V;
- Number of contacts — 1:1×SPDT; 2:2×SPDT;
- Digital Setting Time Relay
- GRT8 Series



Applications

- Multifunctional time relay with digital settings can be used for industrial equipment, lighting control, heating element control, motor and fan control.It has four delay modes and the delay range covers 0.1 seconds to 99 hours.

Feature

- Four functional modes can be set.
- Through digital dialing settings, it is easy to operate and set more precisely.
- Extra wide delay range, 0.1 seconds - 99 hours can be set.
- With AC/DC 12V-240V ultra wide operating voltage specifications are optional.
- The working state of the relay is indicated by the LED indicator
- Ultra small size, only 18mm width, 35mm rail installation

Technical parameters

		GRT8-K1	GRT8-K2
Function		A,B,E,F	
Supply terminals		A1-A2	
Voltage range	W240	AC/DC 12-240V(50-60Hz)	
Burden		AC 0.7-3VA/DC 0.5-1.7W	
Voltage range	A230	AC 230V(50-60Hz)	
Power input		AC max.6VA/1.3W	AC max.6VA/1.9W
Supply voltage tolerance		-15%;+10%	
Supply indication		green LED	
Time ranges		0.1s-99h ,ON,OFF	
Time setting		Digital switch	
Time deviation		≤1%	
Repeat accuracy		0.2%-set value stability	
Temperature coefficient		0.05%/℃ , at=20℃(0.05%℉, at=68℉)	
Output		1 X SPDT	2 X SPDT
Current rating		1 X 16A(AC1)	2 X 8A(AC1)
Switching voltage		250VAC/24VDC	
Min.breaking capacity DC		500mW	
Output indication		Red LED	
Mechanical life		$1x10^7$	
Electrical life(AC1)		$1x10^5$	
Reset time		max.200ms	
Operating temperature		-20℃ to + 55℃(-4℉ to 131℉)	
Storage temperature		-35℃ to + 75℃(-22℉ to 158℉)	
Mounting/DIN rail		Din rail EN/IEC 60715	
Protection degree		IP40 for front panel/IP20 terminals	
Operating position		any	
Overvoltage category		III	
Pollution degree		2	
Max.cable size(mm^2)		solid wire max.1x2.5 or 2x1.5/with sleeve max.1x2.5(AWG 12)	
Dimensions		90x18x64mm	
Weight		1XSPDT:W240-64g, A230-64g	
		2XSPDT:W240-72g, A230-72g	
Standards		EN 61812-1.IEC6947-5-1	

Functions Diagram

A:On Delay (Power On)

When the input voltage U is applied, timing delay t begins. Relay contacts R change state after time delay is complete. Contacts R return to their shelf state when input voltage U is removed. Trigger switch is not used in this function.



E:Off Delay (S Break)

Input voltage U must be applied continuously. When trigger switch S is closed, relay contacts R change state. When trigger switch S is opened, delay t begins. When delay t is complete, contacts R return to their shelf state. If trigger switch S is closed before time delay t is complete, then time is reset. When trigger switch S is opened, the delay begins again, and relay contacts R remain in their energized state. If input voltage U is removed, relay contacts R return to their shelf state.

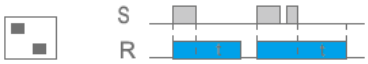

B:Interval (Power On)

When input voltage U is applied, relay contacts R change state immediately and timing cycle begins. When time delay is complete, contacts return to shelf state. When input voltage U is removed, contacts will also return to their shelfstate. Trigger switch is not used in this function.



F:Single Shot

Upon application of input voltage U, the relay is ready to accept trigger signal S. Upon application of the trigger signal S, the relay contacts R transfer and the preset time t begins. During time-out, the trigger signal S is ignored. The relay resets by applying the trigger switch S when the relay is not energized.

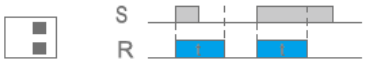

Time Range

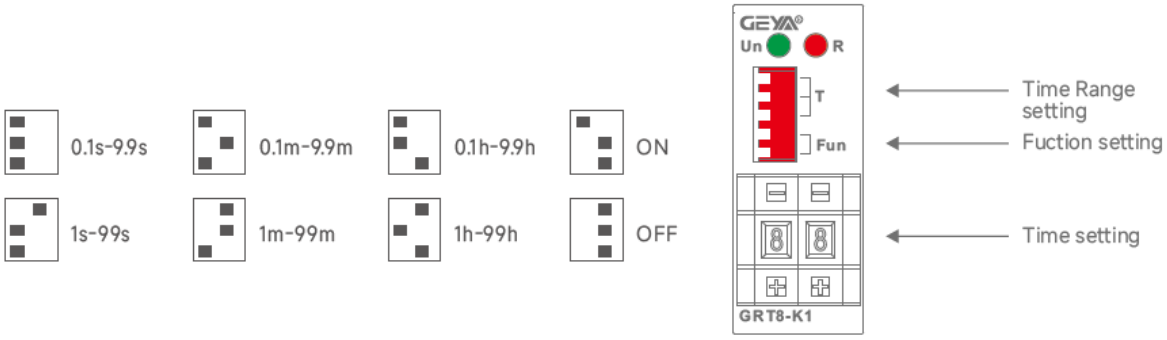

Time Range

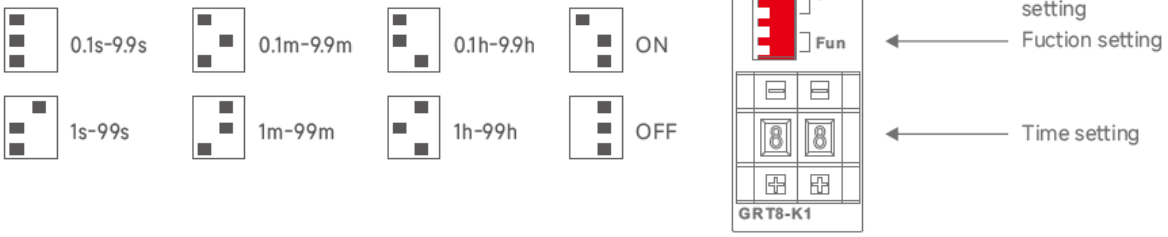

Wiring Diagram

GRT8-K1

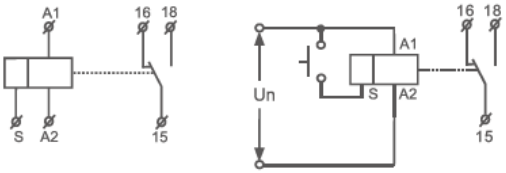

GRT8-K2

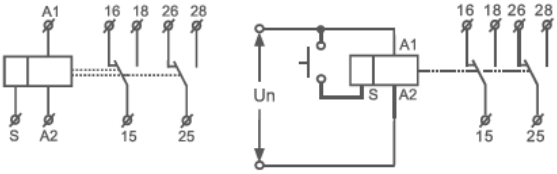

Dimensions(mm)

