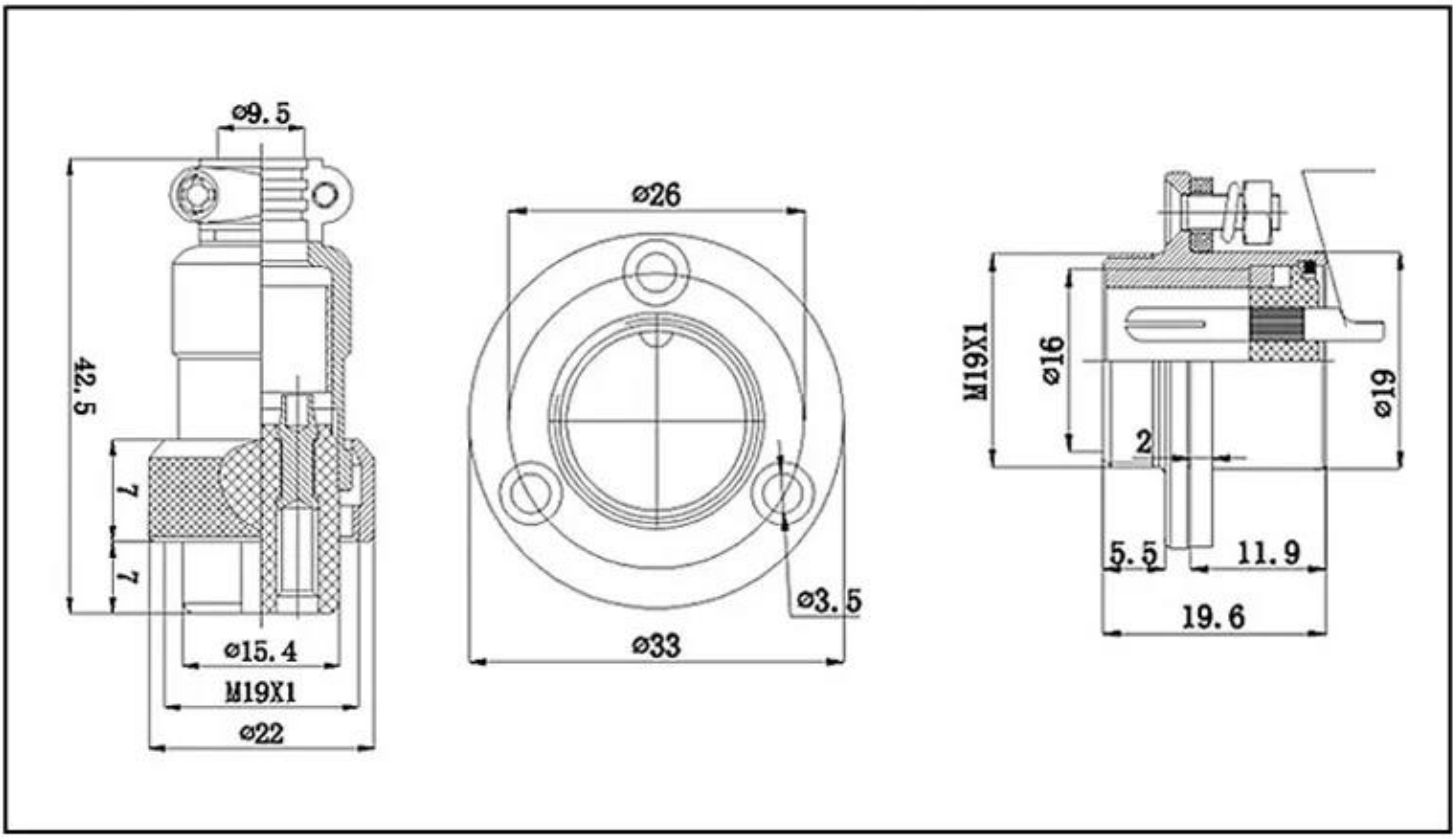

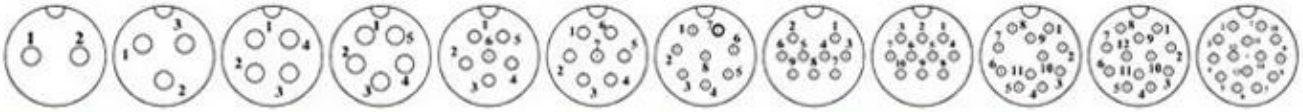

接触体数量(芯数) Contact number (cores)	2	3	4	5	6	7	8	9	10	11	12	14
额定电流/电压 Rated current/voltage	10A 250V	7A 250V	7A 250V	7A 150V	5A 150V	5A 150V	5A 150V	5A 150V	5A 150V	5A 150V	5A 150V	5A 150V
工作电压(AC.Vrms) Working voltage	250	250	250	200	200	200	200	200	200	200	200	200
耐电压(AC.V.rms) Withstand voltage	1500	1500	1500	1000	1000	1000	1000	1000	1000	1000	1000	1000
绝缘体阻抗Insulation resistance (MΩ min.)at dc 500V	1500	1500	1500	1000	1000	1000	1000	1000	1000	1000	1000	1000
接触体阻抗Contact resistance (MΩ max.)at dc 1A	3	3	3	3	3	3	3	3	3	3	3	3
插针(孔径mm) Pins (diameter mm)	Φ2.45	Φ2.45	Φ2.45	Φ2	Φ1.2	Φ1.2	Φ1.2	Φ1.2	Φ1.2	Φ1.2	Φ1.2	Φ1.2