RCA JACK Series

KLS1-RCA-401 R/A PCB Mount Quad 2X2 RCA Jack

Electrical Specification:

Contact resistance : 30mΩ Max
Insulation resistance : 50MΩ Min at DC 500V
Withstand voltage : AC 500V(50Hz) 1min
Operating Temperature : -25°C~+85°C

Materials:

Sealed Plate : Steel
Terminal : Brass
Outer Contact : Brass
Cover : ABS UL94V~0
Washer : PBT UL94V~0
Housing : PBT UL94V~0

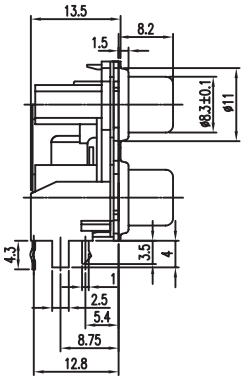

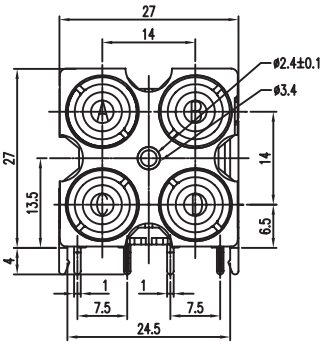

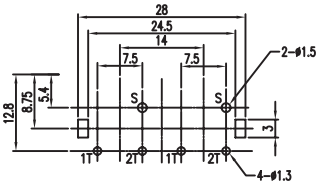

T:1.6 Dimensions of PC board holes
Tolerance : ±0.1(Printed-bottom view)

UNLESS OTHERWISE SPECIFIED, TOLERANCE ON DECIMAL: ±0.3

MODEL NO.	RCA-401
SCHEMATIC	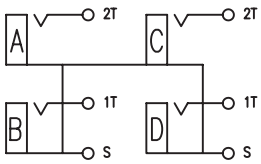

ORDER INFORMATION

Product NO.: KLS1-RCA-401-N-WH-WH-RE-RE

Pos. NO.
RCA Jack Type
G:Nickel Plated

Color :
WH-WH-RE-RE : White-White-Red-Red
RE-RE-WH-WH : Red-Red-White-White
WH-BK-RE-YE : White-Black-Red-Yellow
OR-WH-YL-RE : Orange-White-Yellow-Red